ITEM	QTY -151	P/N	DESCRIPTION	
	X	D119-796-151	XTUBE ASSY (AW119 MKII FWD)	
1	1	D119-796-141	XTUBE ASSY (AW119 MKII FWD)	
2	4	D5123-9	CUSHION	C
3	2	D5149-041	STEP ASSEMBLY	
4	4	MS21920-24	CLAMP	C

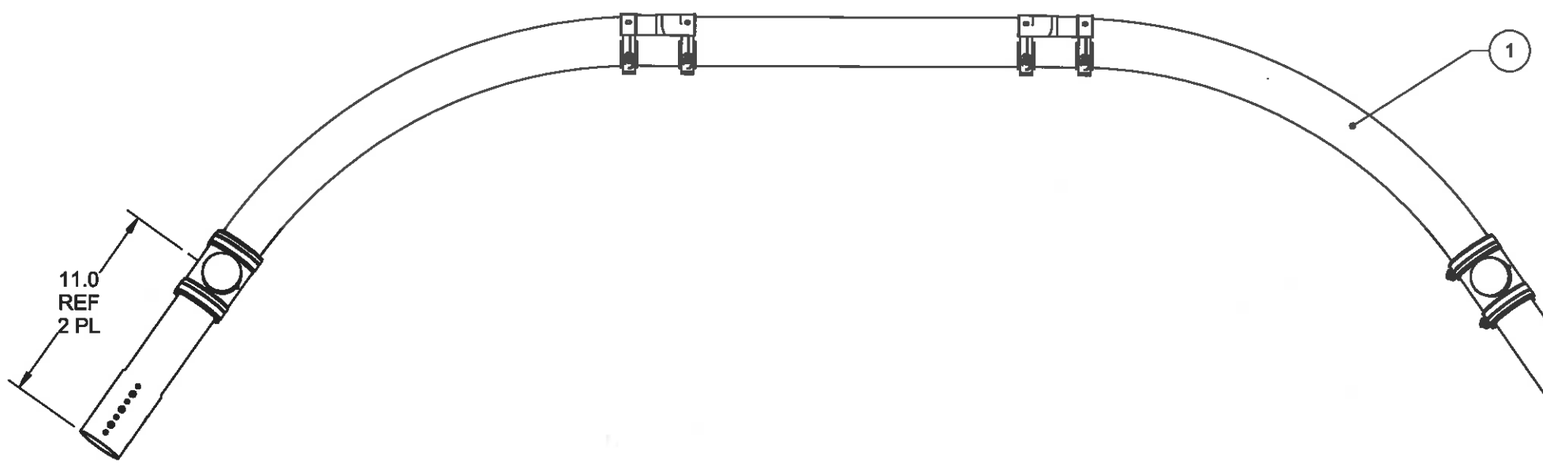

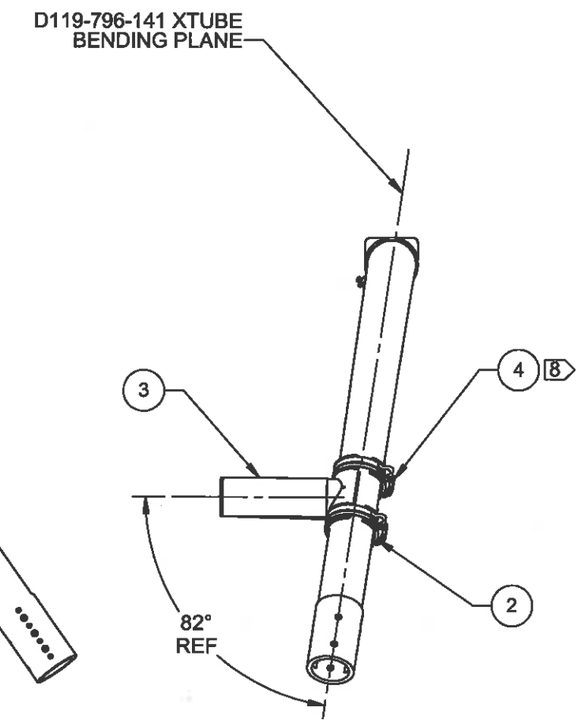

D119-796-151 XTUBE ASSY (AW119 MKII FWD)

PRELIMINARY ISSUE
14.12.09 A.P.
PCb

NOTES:
1) MATERIAL: N/A
2) FINISH: NONE
3) TOLERANCES: PER DART QSI 018 UNLESS OTHERWISE NOTED
4) UNITS: INCHES UNLESS OTHERWISE NOTED
5) BREAK SHARP EDGES: N/A
6) IDENTIFICATION: IDENTIFY PER DART QSI 044 METHOD 6.5
7) WEIGHT: 19.23 lbs
8) TORQUE MS21920-24 CLAMPS TO 50 IN-LBS MAX

REV.	DESCRIPTION	BY	DATE
C	ADD D5123-9, MS21920-24, DELETE D5149-043, D5150-043, D2274	DB	14.11.24
B	D5149-043 WAS D5149-041, AN4C6A WAS AN4C10A, D2274 WAS D5153-1	AP	14.11.04
A	NEW ISSUE	AP	14.09.03

UNAPPROVED

DESIGN	AP	DART AEROSPACE LTD HAWKESBURY, ONTARIO, CANADA
DRAWN	DB	
CHECKED		DRAWING NO. D119-796-151 REV. C6 SHEET 1 OF 1
MFG. APPR.		
APPROVED		TITLE XTUBE ASSY (AW119 MKII FWD) SCALE NTS
DE APPR.		
DATE	14.11.24	

COPYRIGHT © 2014 BY DART AEROSPACE LTD
THIS DOCUMENT IS PRIVATE AND CONFIDENTIAL AND IS SUPPLIED ON THE EXPRESS CONDITION THAT IT IS NOT TO BE USED FOR ANY PURPOSE OR COPIED OR COMMUNICATED TO ANY OTHER PERSON WITHOUT WRITTEN PERMISSION FROM DART AEROSPACE LTD.